INLET: GASKETED BELL - SDR-35 PVC

Base Casting is ASTM A-48 Class 30 Cast Iron
(Various Contours available to fit 6.275" - 30.00" O.D. Mains)

PVC Adapter is an ASTM D3034, SDR-35 Gasketed Bell

Castings and Adapter cemented permanently in place with two-part urethane adhesive

Base of Saddle dip-coated in Waterbased Bituminous Coating

Strap is 24 ga. X 2.5" wide Type 304 Stainless Steel

Strap Pins are .75" dia. Type 303 Stainless Steel

T-Bolts are .375" - 16 Type 304 Stainless Steel

Nuts and Washers are Type 18-8 Stainless Steel

O-Ring is ASTM C-361-77 Tubular Polyisoprene

4" inlet requires a 4" x 6.50" oval tap in the Sewer Main

6" inlet requires a 6" x 9.25" oval tap in the Sewer Main
(Sewer Main must be at least 8" dia.)

Note: This Dwg. supercedes Dwg. No. R-3157-D1

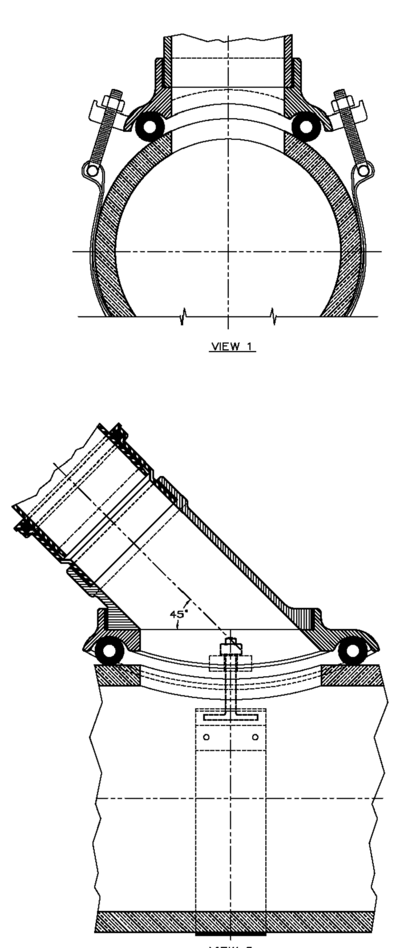

WYE GRAVITY SEWER SADDLE

TO BE USED WHEN A SEWER MAIN HAS BEEN LINED WITH A CURED IN PLACE MATERIAL.

ENGINEERING STANDARDS 2022

REVISIONS		ENGINEERING DIVISION CITY OF POMPANO BEACH	WYE GRAVITY SEWER SADDLE
BY	DATE	SCALE: N.T.S.	DATE: MAY 2022 DWG. NO. 201-2

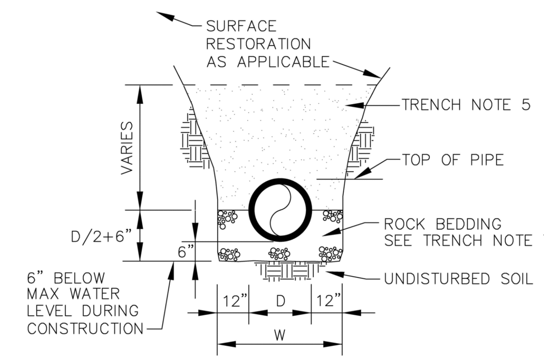

TRENCH BACKFILL / BEDDING CLASS " B "

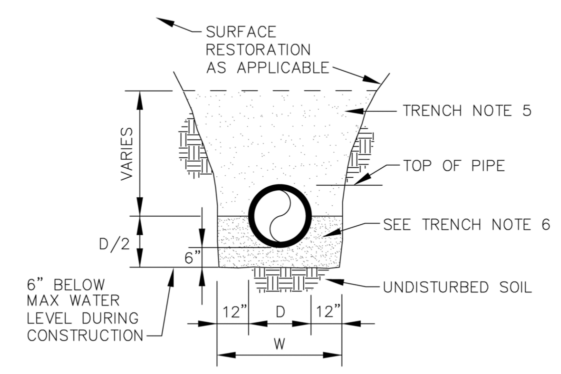

TRENCH BACKFILL / BEDDING CLASS " A "

ENGINEERING STANDARDS 2022

REVISIONS		ENGINEERING DIVISION CITY OF POMPANO BEACH	TRENCH BACKFILL / BEDDING
BY	DATE		
S.S.	JUNE 2005	SCALE: N.T.S.	DATE: JUNE 2022 DWG. NO. 203-1

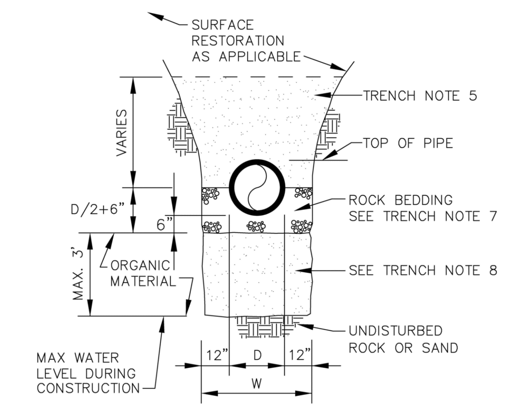

TRENCH BACKFILL / BEDDING CLASS " C "

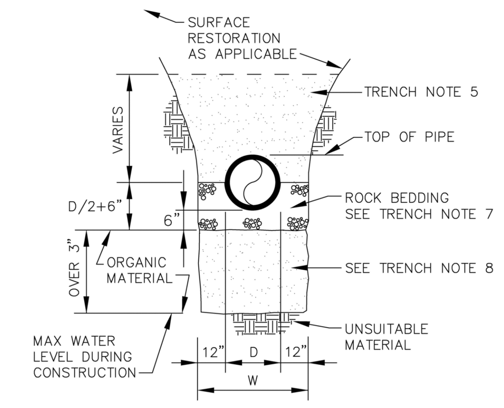

TRENCH BACKFILL / BEDDING CLASS " D "

ENGINEERING STANDARDS 2022

REVISIONS		ENGINEERING DIVISION CITY OF POMPANO BEACH	TRENCH BACKFILL / BEDDING
BY	DATE		
S.S.	JUNE 2005	SCALE: N.T.S.	DATE: JUNE 2022 DWG. NO. 203-2

1. OUTLINE OF TRENCH EXCAVATION IS FOR ILLUSTRATIVE PURPOSES ONLY. ACTUAL TRENCH WIDTH AND SHAPE WILL VARY WITH SOIL CONDITIONS. TRENCH EXCAVATION SHALL BE IN ACCORDANCE WITH THE "FLORIDA TRENCH SAFETY ACT" AND OSHA TRENCH SAFETY STANDARDS.
2. TYPICAL TRENCH BACKFILL/BEDDING FOR WATER MAIN AND FORCE MAIN INSTALLATIONS SHALL BE CLASS "A" AS SHOWN IN DETAIL.
3. TYPICAL TRENCH BACKFILL/BEDDING FOR GRAVITY SEWER INSTALLATION SHALL BE CLASS "B" AS SHOWN IN DETAIL.
4. TRENCH BACKFILL/BEDDING CLASS "C" AND CLASS "D" SHALL BE USED FOR PIPE INSTALLATIONS WHERE UNSITABLE TRENCH MATERIALS ARE ENCOUNTERED.
5. TRENCH ZONE BACKFILL SHALL BE MATERIAL TYPE 1 OR TYPES A THRU H, OR ANY MIXTURE THEREOF, WHERE SURFACE RESTORATION TYPE "1" IS APPLICABLE, TRENCH ZONE BACKFILL SHALL BE PLACED IN 12" LIFTS, COMPACTED TO 90% OF THE MATERIAL'S MAXIMUM DENSITY AS DETERMINED BY ASTM D-697 (AASHTO T-99). WHERE SURFACE RESTORATION TYPES "2", "3" AND "4" ARE APPLICABLE, TRENCH BACKFILL SHALL BE PLACED IN 8" LIFTS COMPACTED TO 98% OF THE MATERIAL'S DENSITY AS DETERMINED BY ASTM D-698 (AASHTO T-99).
6. BEDDING MATERIAL FOR TYPICAL WATER MAIN AND FORCE MAIN INSTAL-LATION SHALL BE TYPE C. BEDDING SHALL BE COMPACTED TO 95% OF THE MATERIAL'S MAXIMUM DENSITY AS DETERMINED BY ASTM D-1557 (AASHTO T-180).
7. BEDDING MATERIAL FOR TYPICAL GRAVITY SEWER INSTALLATION AND ANY INSTALLATION WHERE UNSUITABLE TRENCH BOTTOM CONDITIONS ARE FOUND SHALL BE TYPE E. BEDDING SHALL BE PLACED IN LIFTS NOT TO EXCEED 6" AND COMPACTED TO 95% OF THE MATERIAL'S MAXIMUM DENSITY AS DETERMINED BY ASTM D-1557 (AASHTO T-180).
8. UNSUITABLE MATERIAL SHALL BE REMOVED TO UNDISTURBED ROCK OR SAND OR TO DEPTH AS SPECIFIED BY ENGINEER. BACKFILL MATERIAL SHALL BE TYPE C. BACKFILL SHALL BE PLACED IN 8" LIFTS COMPACTED TO 95% OF THE MATERIAL'S MAXIMUM DENSITY AS DETERMINED BY ASTM D-1557 AASHTO T-180).

TRENCH BACKFILL / BEDDING NOTES

ENGINEERING STANDARDS 2022

REVISIONS		ENGINEERING DIVISION CITY OF POMPANO BEACH	TRENCH BACKFILL / BEDDING
BY	DATE	SCALE: N.T.S.	DATE: JUNE 2022 DWG. NO. 203-3

9. BEDDING TYPES – THE FOLLOWING TYPES OF SUITABLE MATERIALS ARE DESIGNATED AND DEFINED AS FOLLOWING:

TYPE A: CRUSHED LIMEROCK OR SAND WITH 100 PERCENT PASSING A 1 INCH SIEVE AND A SAND EQUIVALENT VALUE NOT LESS THAN 50.

TYPE B: CRUSHED LIMEROCK OR SAND WITH 100 PERCENT PASSING A 1/2 INCH SIEVE AND A SAND EQUIVALENT VALUE NOT LESS THAN 50.

TYPE C: SAND WITH 100 PERCENT PASSING A 3/8 INCH SIEVE, AT LEAST 90 PERCENT PASSING A NUMBER 4 SIEVE, AND A SAND EQUIVALENT VALUE NOT LESS THAN 30.

TYPE D: CRUSHED LIMEROCK WITH 100 PERCENT PASSING A 1 INCH SIEVE AND NOT MORE THAN 10 PERCENT A NUMBER 4 SIEVE.

TYPE E: CRUSHED LIMEROCK OR SAND WITH 100 PERCENT PASSING A 3/4 INCH SIEVE AND NOT MORE THAN 10 PERCENT PASSING A NUMBER 4 SIEVE.

TYPE F: CRUSHED LIMEROCK MEETING THE FOLLOWING GRADATION REQUIRE-MENTS.

SIEVE SIZE	PERCENTAGE PASSING
2 INCH	100
1-1/2 INCH	90-100
1 INCH	20-55
3/4 INCH	0-15
NO. 200	0-3

TRENCH BACKFILL / BEDDING NOTES

ENGINEERING STANDARDS 2022

REVISIONS		ENGINEERING DIVISION CITY OF POMPANO BEACH	TRENCH BACKFILL / BEDDING
BY	DATE	SCALE: N.T.S.	DATE: JUNE 2022 DWG. NO. 203-4

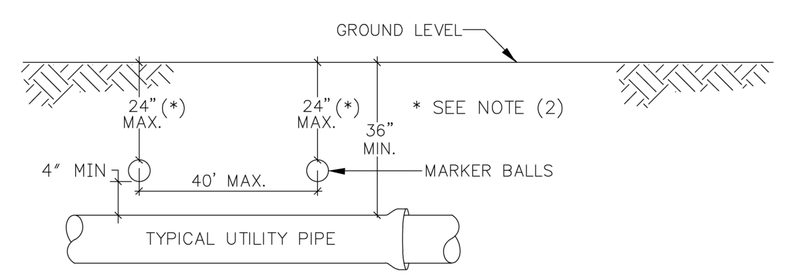

GENERAL NOTES:

1. ALL UTILITY PIPE SHALL BE INSTALLED WITH 4"ø MARKING BALLS PLACED EVERY 40' AND AT EVERY FITTING, FOR IDENTIFICATION AND WARNING PURPOSES, BURIED ABOVE THE PIPE AT A MAXIMUM DEPTH OF 24 INCHES OR AS APPROVED BY THE OWNER. IT SHALL BE COLOR CODED AND WORDED AS FOLLOWS:

   SEWER SYSTEM
   A. COLOR: GREEN
   B. LETTERING: SANITARY SEWER
   C. FREQUENCY OF MARKER BALLS SHALL BE 121.6 Khz.
   D. THE MARKER BALLS CAN BE BURIED IN ANY ORIENTATION.

   THE MARKER BALLS SHALL BE DETECTABLE BY STANDARD METAL DETECTION EQUIPMENT AND SHALL BE MANUFACTURED BY TEMPO OR 3M LOCATOR SYSTEM OR EQUIVALENT (FREQUENCY 121.6 Khz)

2. FOR LARGE DIAMETER PIPE INSTALLED AT DEPTHS BELOW 4'-0" MARKER BALLS SHALL BE PLACED AT A MAXIMUM DEPTH OF 4'-0" BELOW GRADE *.

SEWER PIPE IDENTIFICATION

ENGINEERING STANDARDS 2022

REVISIONS		ENGINEERING DIVISION CITY OF POMPANO BEACH	SEWER PIPE IDENTIFICATION
BY	DATE		
S.S.	01/30/12	SCALE: N.T.S.	DATE: JUNE 2022 DWG. NO. 207-1

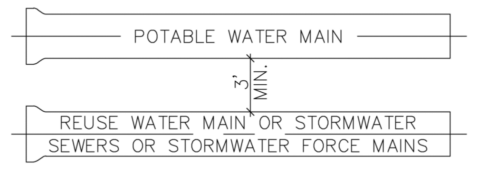

A MINIMUM HORIZONTAL SEPARATION 3' (OUTSIDE TO OUTSIDE), SHALL BE MAINTAINED BETWEEN POTABLE WATER MAINS AND STORMWATER SEWERS, STORMWATER FORCE MAINS AND REGULATED REUSE WATER MAINS.

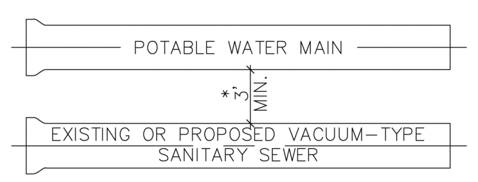

A MINIMUM HORIZONTAL SEPARATION 3' (OUTSIDE TO OUTSIDE), SHALL BE MAINTAINED BETWEEN EXISTING OR PROPOSED VACUUM-TYPE SANITARY SEWER. * SEE NOTE D(1)(B).

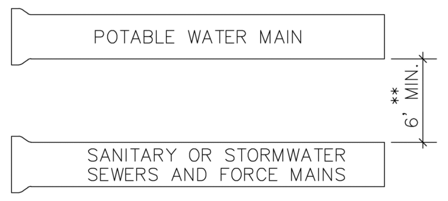

A MINIMUM HORIZONTAL SEPARATION OF 6' (OUTSIDE TO OUTSIDE), SHALL BE MAINTAINED BETWEEN POTABLE WATER MAINS AND EXISTING OR PROPOSED GRAVITY-OR PRESSURE TYPE SANITARY SEWER, WASTEWATER FORCE MAIN OR NOT REGULATED REUSE WATER MAIN. ** SEE NOTE D(1)(C).

MINIMUM HORIZONTAL SEPARATION REQUIREMENTS FOR POTABLE WATER, REUSE, STORMWATER AND SEWER LINES

ENGINEERING STANDARDS 2022

REVISIONS		ENGINEERING DIVISION CITY OF POMPANO BEACH	MIN. HORIZONTAL SEPARATION FOR SANITARY SEWER
BY	DATE		
S.S.	01/30/12	SCALE: N.T.S.	DATE: JUNE 2022 DWG. NO. 209-1

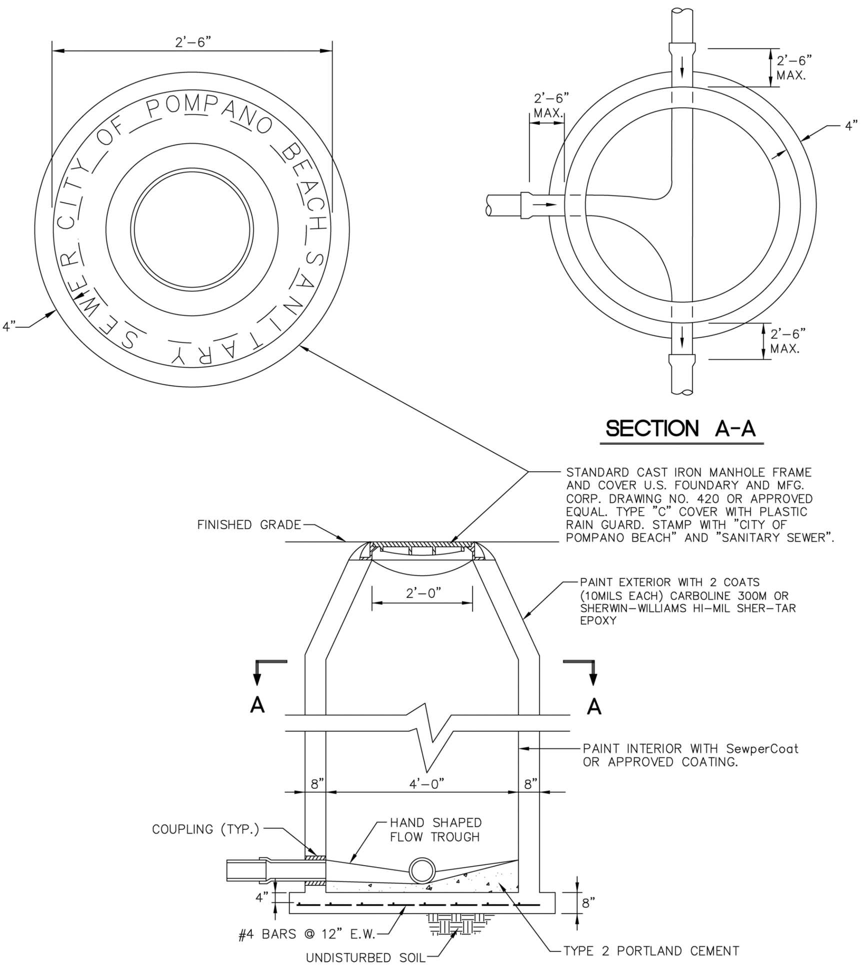

STANDARD MANHOLE

TO BE USED WHERE DEPTH EXCEEDS 4 FEET

ENGINEERING STANDARDS 2022

REVISIONS		ENGINEERING DIVISION CITY OF POMPANO BEACH	STANDARD MANHOLE
BY	DATE		
S.S.	JUNE 2005		
T.W.	11-2007		
S.S.	12-2013		
A.S.	09-2021	SCALE: N.T.S.	DATE: JUNE 2022 DWG. NO. 215-1

WILFORD ZEPHYR

Digitally signed by WILFORD ZEPHYR
Date: 2023.11.13 17:09:51 -05'00'

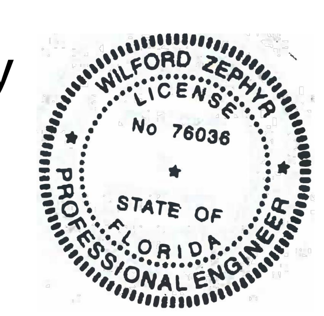

11-13-23

THIS ITEM HAS BEEN DIGITALLY SIGNED AND SEALED BY WILFORD ZEPHYR ON THE DATE ADJACENT TO THE SEAL.

PRINTED COPIES OF THIS DOCUMENT ARE NOT CONSIDERED SIGNED AND SEALED AND THE SIGNATURE MUST BE VERIFIED ON ANY ELECTRONIC COPIES.

WATER & SEWER DETAILS

SCALE: N.T.S.

REVISIONS

NO.	DATE	DESCRIPTION

ZEPHYR ENGINEERING
WILFORD ZEPHYR, P.E.
HOLLYWOOD, FL
(786)302-7693
wzephyreng@gmail.com
CA#: 31158

ZE

PROPOSED 12 HOUSES
NW 10th STREET
POMPANO BEACH, FL 33060

P.E.#:76036
DATE: 7/28/23
SCALE: N.T.S.
SHEET NO.: WS-3
7 OF
PROJECT NO.: 23-34

DRC
PZ23-12000051
12/20/2023